A Contagion of Interoperability - Collaborations with Other Industries

Information Revolution 2014
August 05 – 06
Microsoft Conference Center
Redmond, Washington

Thomas J. Burke
OPC Foundation President &
Executive Director
W: +1 (480) 483-6644
M: +1 (440) 227-2161
Thomas.Burke@OPCFoundation.org

Paul Hunkar
Technical Director
DS Interoperability llc
Paul.Hunkar@dsinteroperability.com

OPC UA Information Modeling

- Modeling Data – Providing Information
- Transport Data – Platform Independent

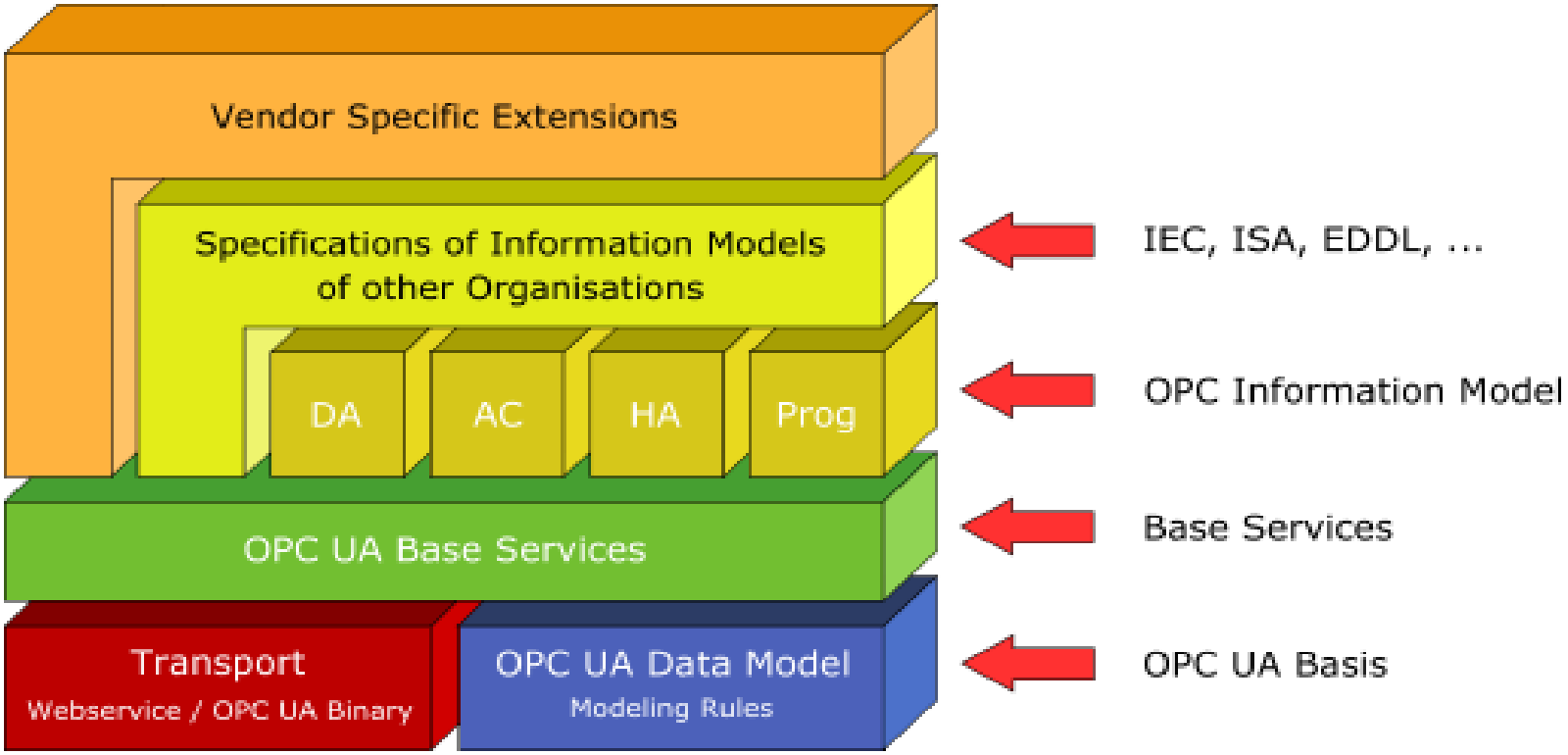

Unified Data Model

- Unification ➔ Simplification
- Classic OPC defines different address space models for process data, alarms and historical data
- Reduced system integration costs by providing a common architecture for accessing information

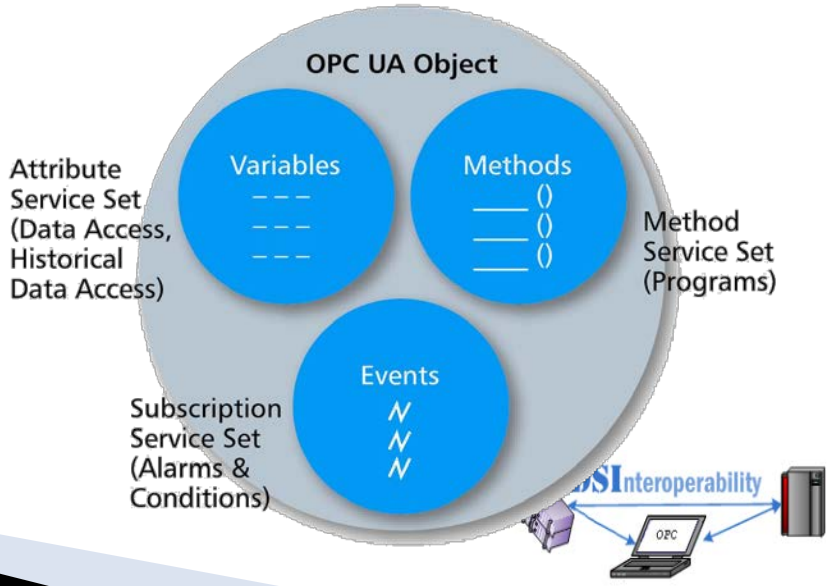

Complex Data, Modeling

- OPC products can now represent complex systems with OPC UA's rich Information Model
- OPC UA provides data and meta data
- UA Information model defines modeling elements and modeling rules
  - Complex data types
  - Methods

    State machines
  - Inheritance

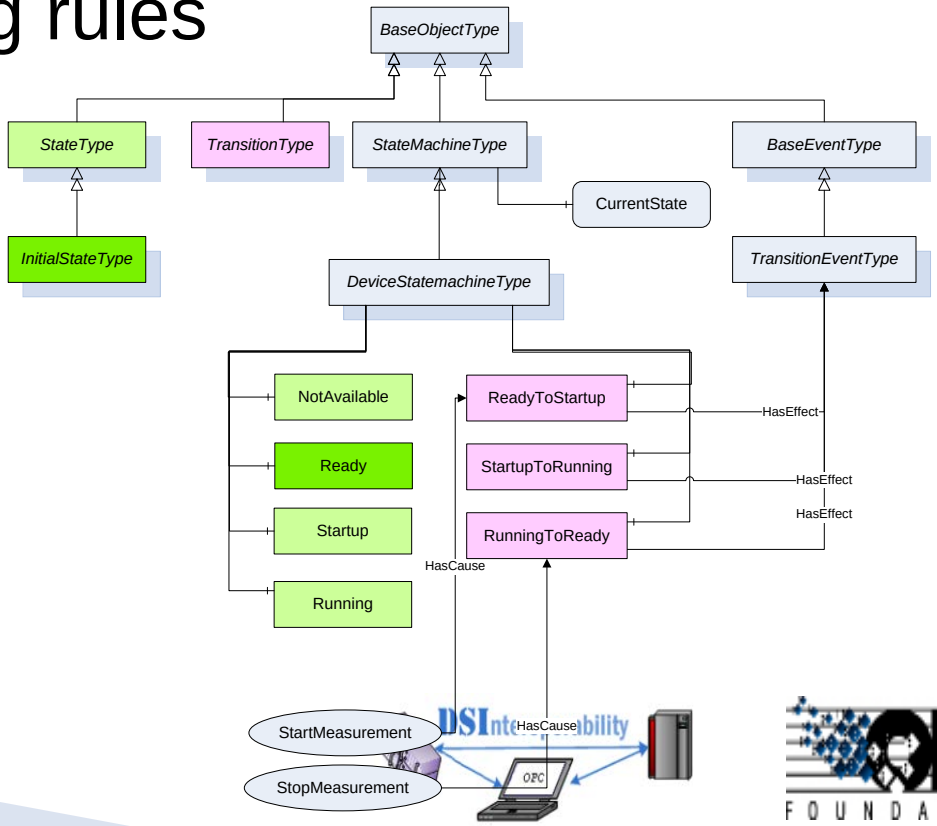

OPC Foundation Collaborations

- OpenO&M
- ADI
- PLCOpen / MES
- ISA S95
- FDI
- FDT
- MTConnect
- ODVA/Sercos
- BACnet (Europe)
- PRODML
- MDIS
- DSATS
- AutomationML
- SLC

Collaboration in Building Automation

- Collaboration with BACnet Interest Group Europe (BIG-EU)
- Integration of Industrial and Building Automation
- Mapping of BACnet and OPC Unified Architecture
- First mapping specification planned for July 2013

BACnet working group started on October 01, 2012

- Collaboration with ONFIV (Video) in discussion
- OPC is used but lack of standardization in this area

Physical Security Systems

Collaboration in Energy

- OPC UA evaluation is in progress and supported by OPC Foundation
- MCS-DCS Interface Standardization (MDIS)
  - Standard for drilling
- Smart Grid Interoperability Panel (SGIP)
  - Selection of standards used for Smart Grid in North America
  - Review by Cyber Security Working Group (CSWG)

OPC UA evaluated for use in different standards

- WG 10 – Communications & associated data models in power systems (IEC 61850)
- WG 13 – Energy management system application program interface
- OPC UA Experts involved in these working groups

IEC TC 57 Power Systems

Collaboration in Transportation

- Several national railway infrastructure providers evaluating OPC UA
- Railway infrastructure monitoring and integration
- Potential for international standardization

Companion Specifications

MTConnect Completed

ISA S95 Completed

MDIS Under Development

PLCOpen Released

BACnet In Progress

Industrial Automation Collaboration

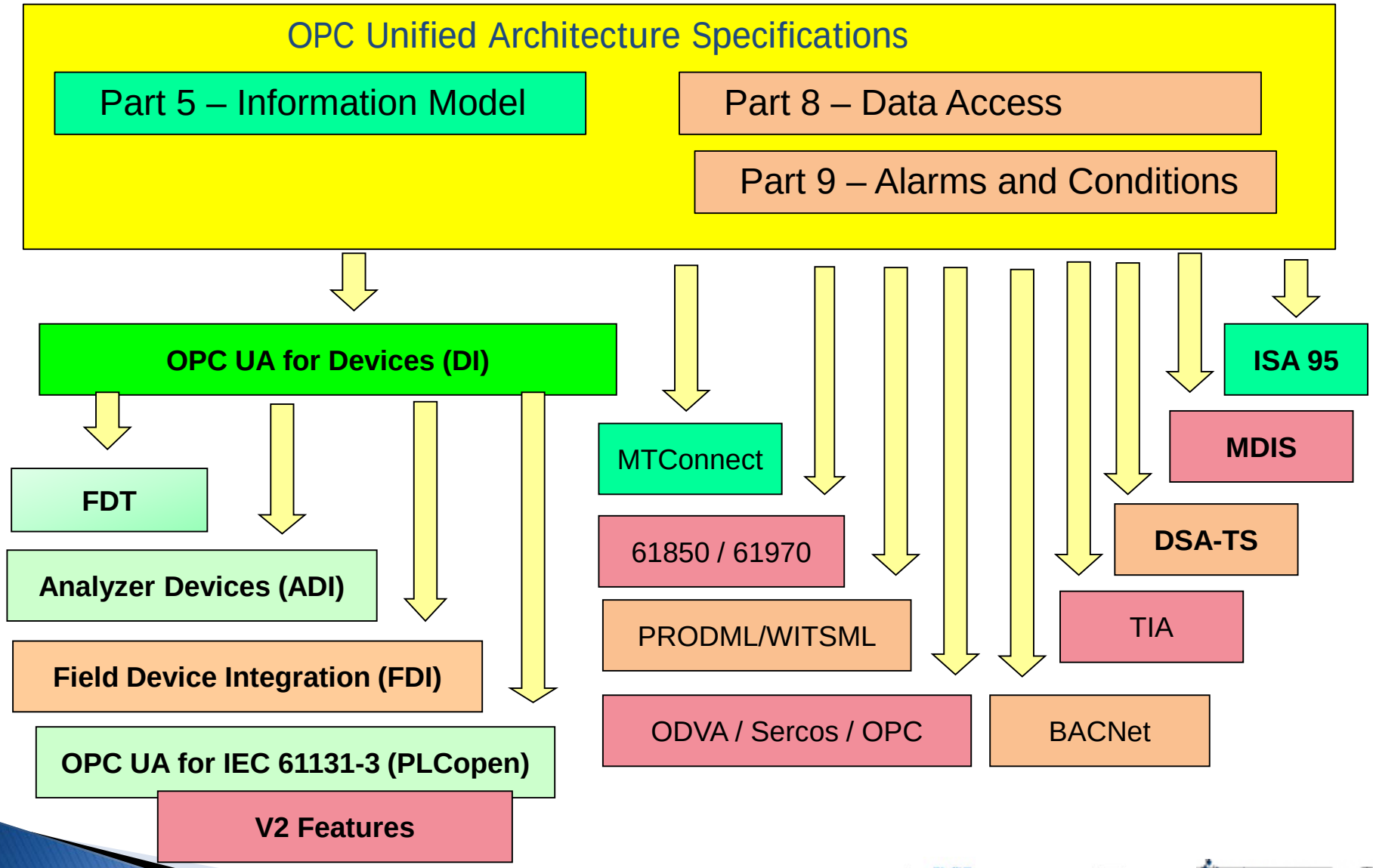

DSInteroperability

OPC FOUNDATION

MDIS

OIL & Gas Platforms

- Topside controls
- Subsea controls
- Multiple vendors
- Integration is key challenge

Operating Companies - Want standard communication interface between:

- Subsea gateway,
- MCS (Master Control Station)
- DCS (Distributed Control System)

MDIS - **M**CS-**D**CS **I**nterface **S**tandardization

MDIS Members

The current members are:

- ABB,
- Aker Solutions,
- BP,
- Chevron,
- ConocoPhillips,
- Dril-Quip,
- Emerson,
- ENGlobal,
- ExxonMobil,
- FMC,
- GE Oil and Gas,
- Honeywell,
- Invensys,
- Wood Group Kenny,
- Kongsberg,
- OneSubsea,
- Petrobras,
- Prediktor,
- Proserv,
- Rockwell Automation,
- Shell,
- Siemens,
- Statoil,
- Total,
- W-Industries,
- Woodside,
- Yokogawa

MDIS – Standardize?

What are the goals?

- Cost Savings in engineering
- Cost Savings in system test and integration

What is being standardized?

- Standard Interface
- Standard Information Model
- Architectures

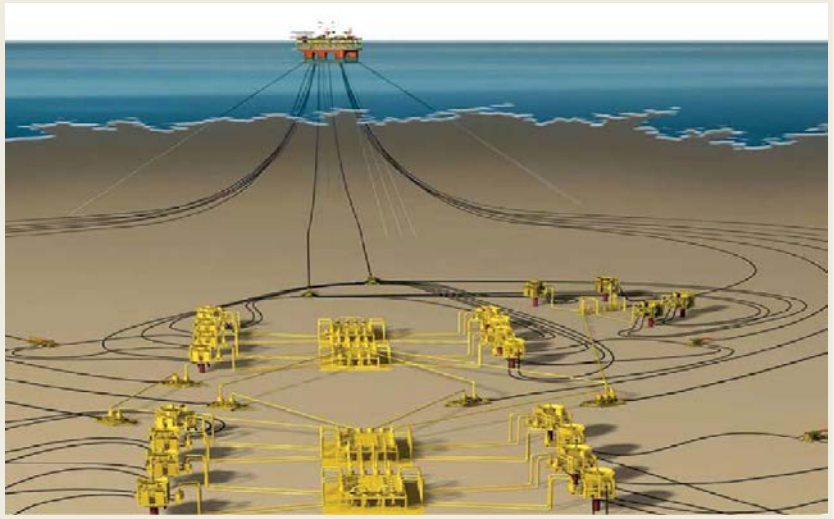

MDIS - Standardize

- Interface
  - What communication protocol (OPC UA)
    - Redundancy
    - Robustness
    - Security
- Information Model
  - Valve
  - Choke
  - Instrument
  - Discrete
  - CIMV
  - DHPT
  - MPFM
  - EPU
  - SEM
  - Motor
  - Manifold

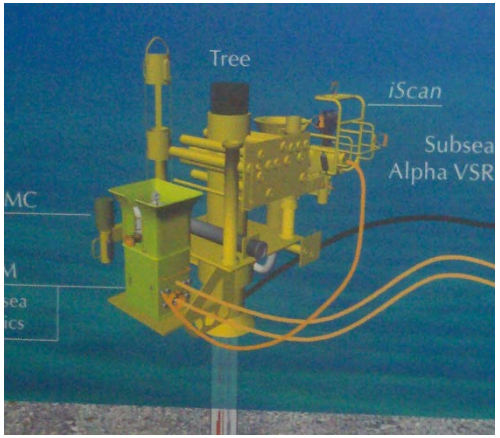

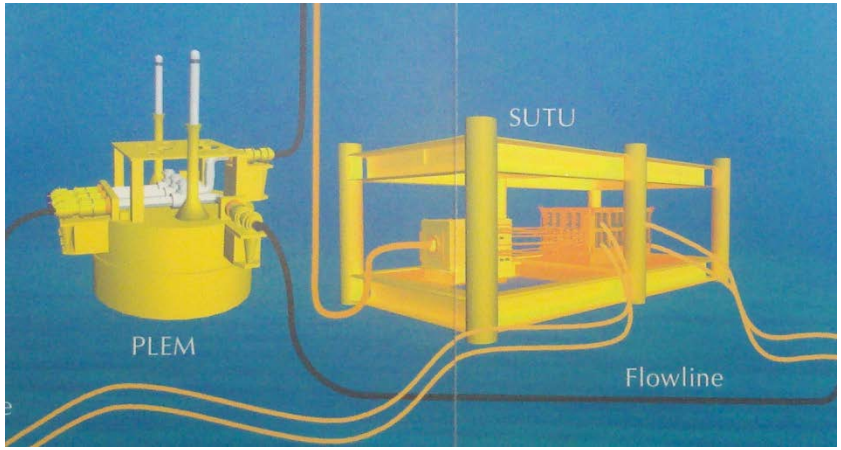

DSInteroperability

OPC FOUNDATION

MDIS - Architecture

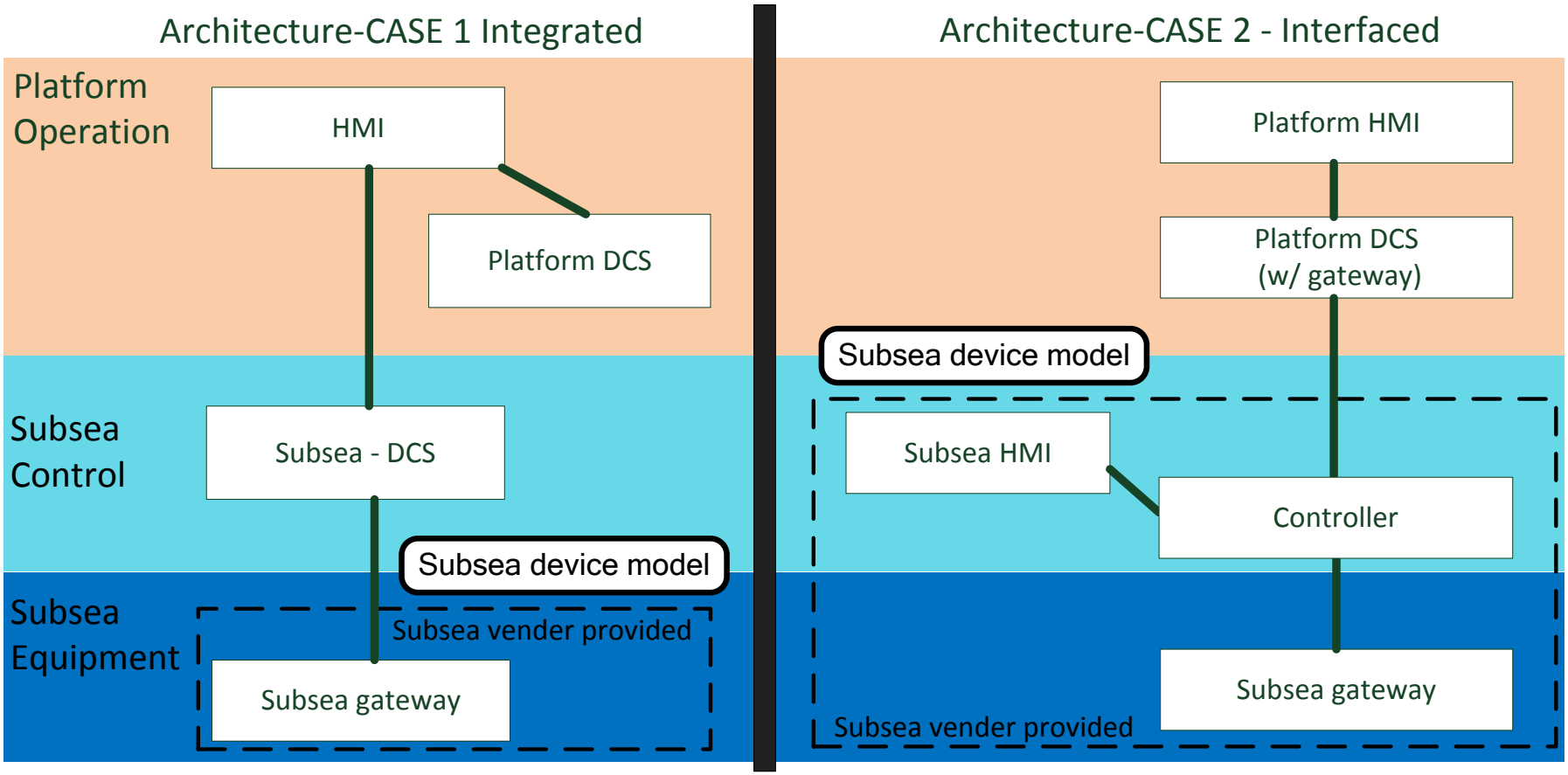

MDIS - Progress

- Architecture working group (complete)

- Objects working group
  - Valve – OPC UA ready
  - Instrument – Discussing OPC UA Version
  - Choke – Discussing OPC UA Version
  - Discrete – wait final agreement on Object definition
  - Other Objects still being decided and defined

- Validation Working Group
  - Defining required profiles and functionality
  - Defining first IOP session (Target June 2015)
  - Defining testing and certification

MTConnect

- Universal factory floor communications protocol
- Intended for the shop floor environment
- Defines a “dictionary” for manufacturing data

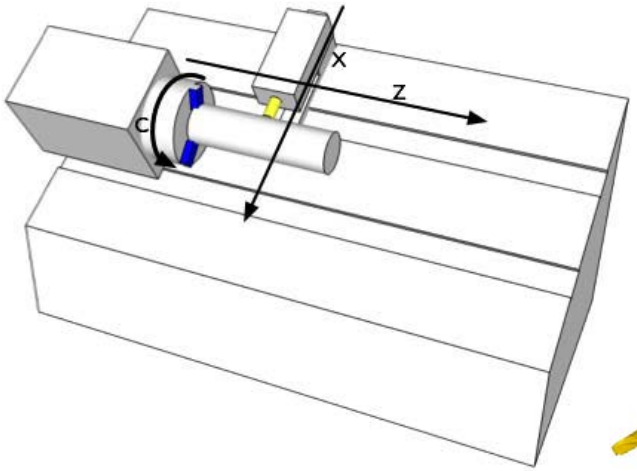

OPC FOUNDATION

Use Cases

Device Manufacturer

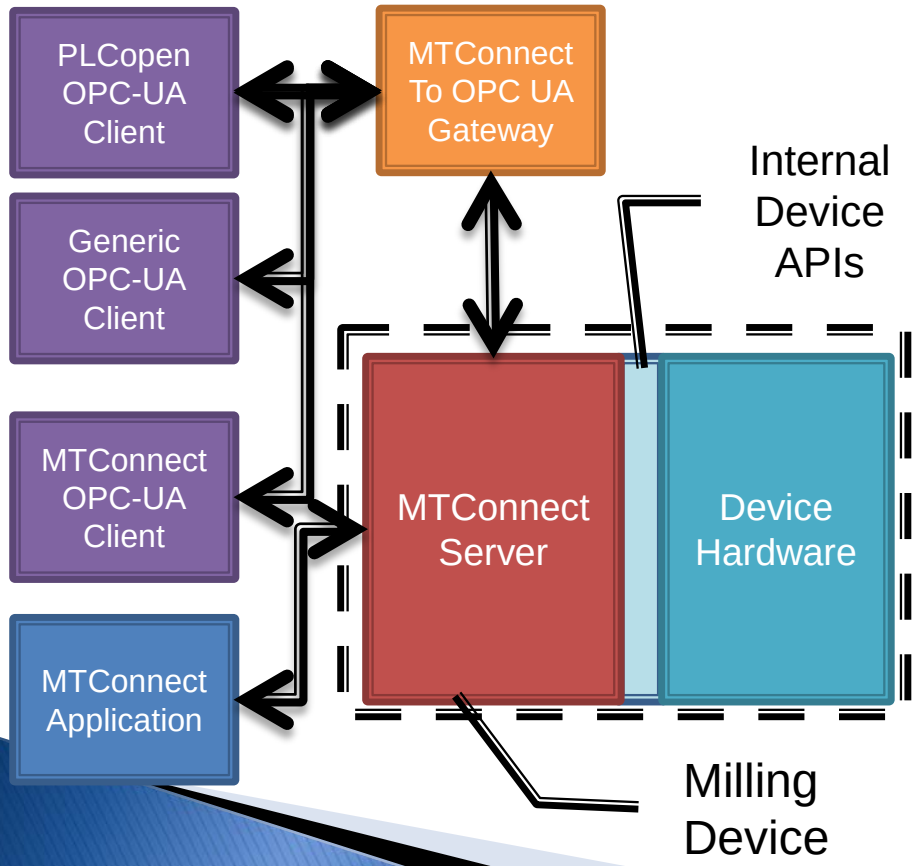

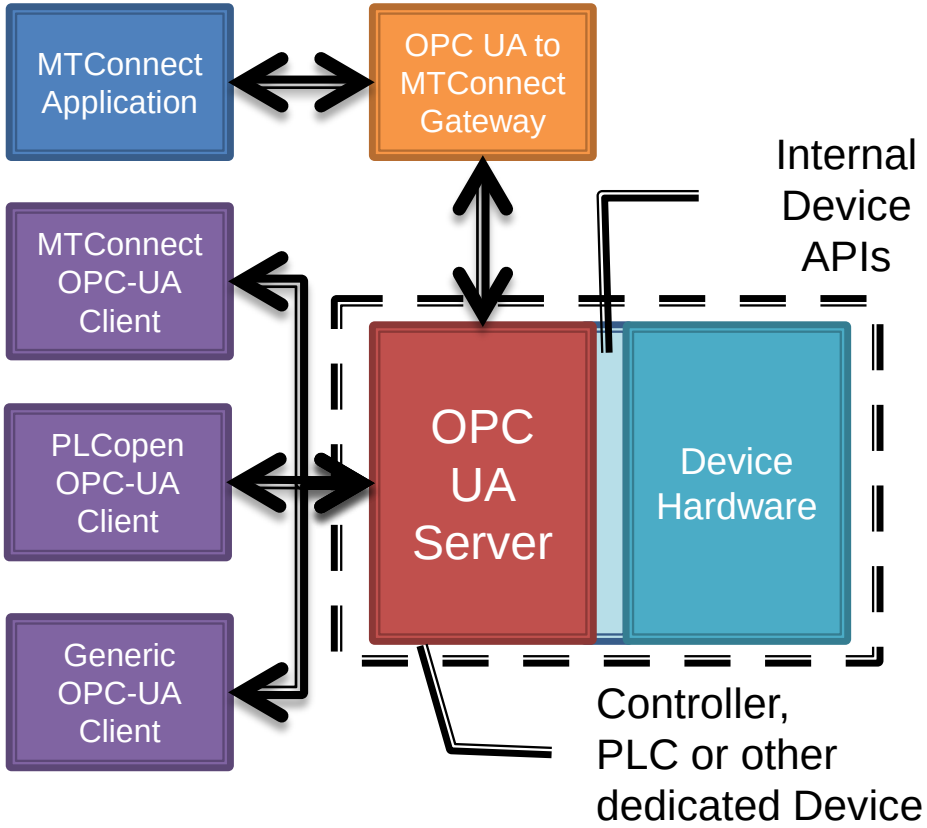

MTConnect

- Existing Standard – HTTP, XML based, Information model
- OPC UA - offers higher performance, security

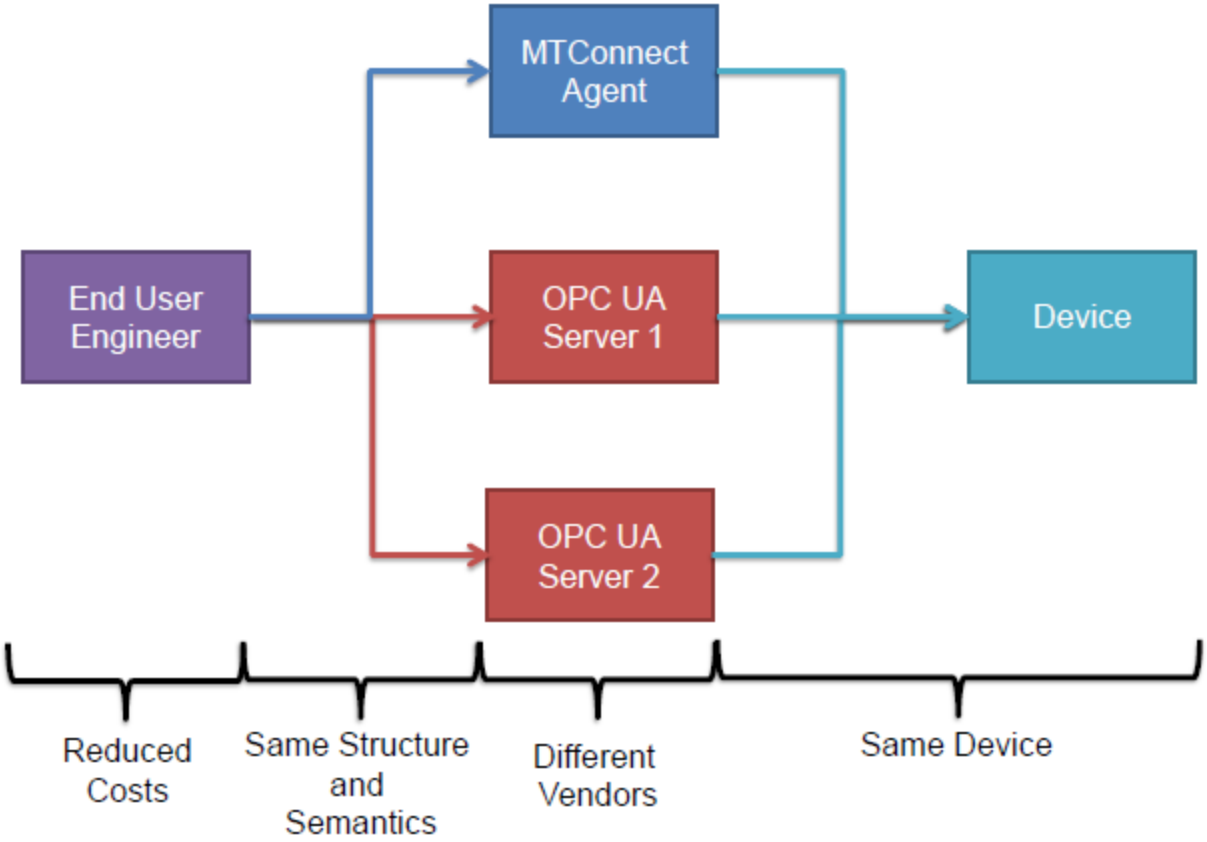

Other Key Advantages

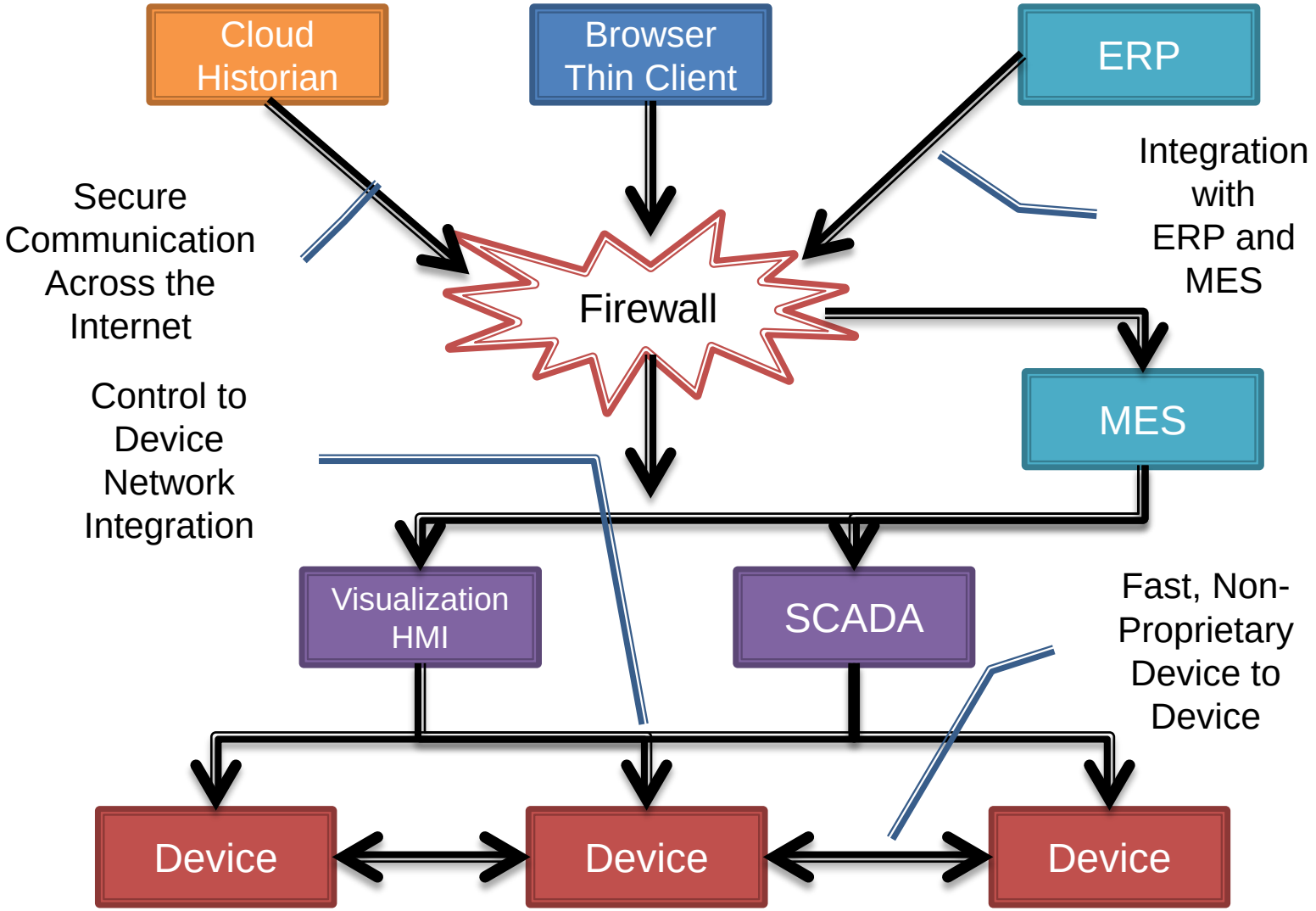

Summary of Model

- Includes the following MTConnect items:
  - Device
  - Component
  - Sensors
  - Conditions
  - Events
  - Assets

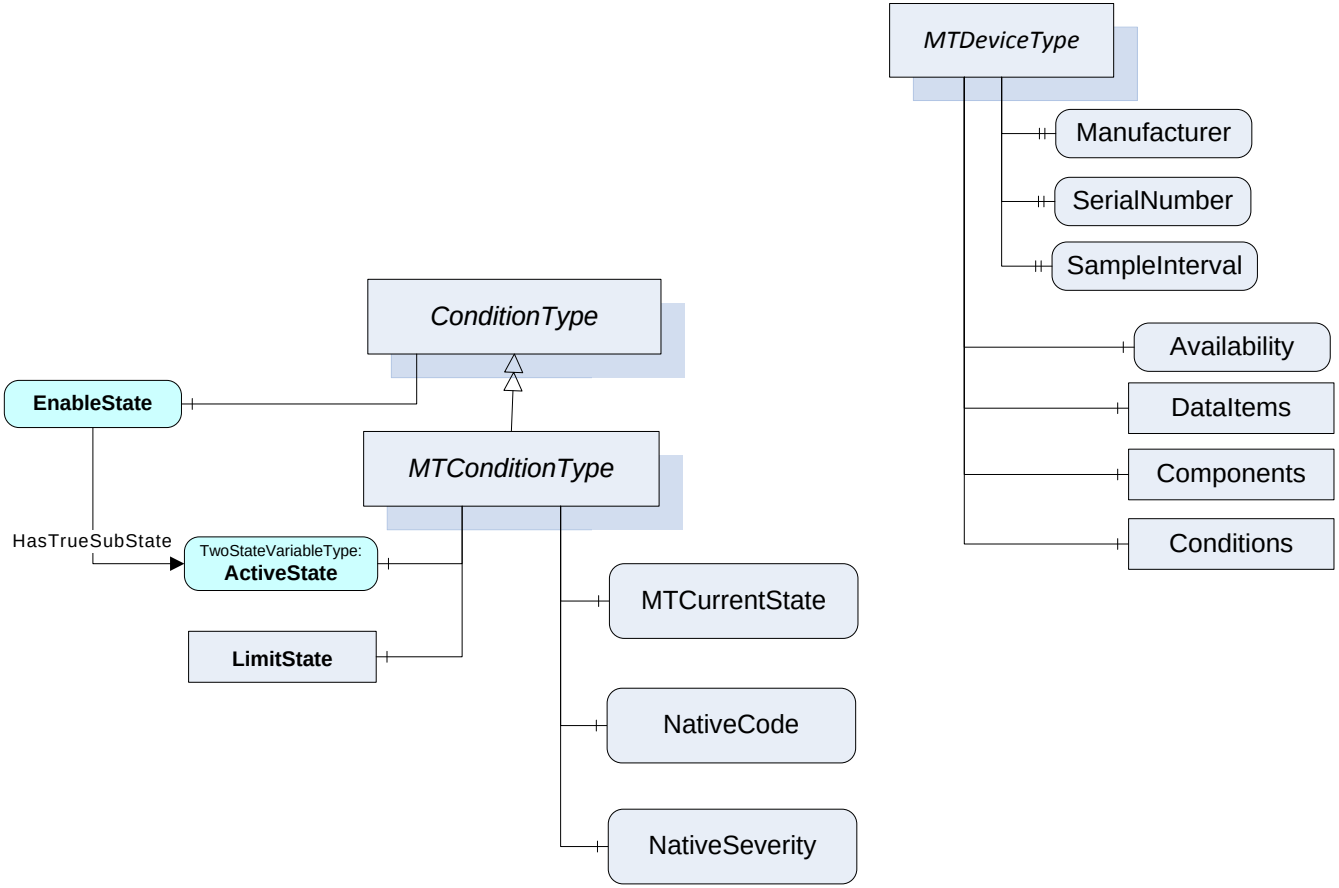

MTConnect - OPC UA Companion Specification

- Compatible with MTConnect Version 1.2
- Compatible with OPC UA Version 1.02
- Released Candidate
- Waiting for sample code
- Targeted 3rd Quarter 2014
  - Will include updated to MTConnect 1.3 release

OPC Client - PLC - OPC Server

MTConnect Device and OPC UA

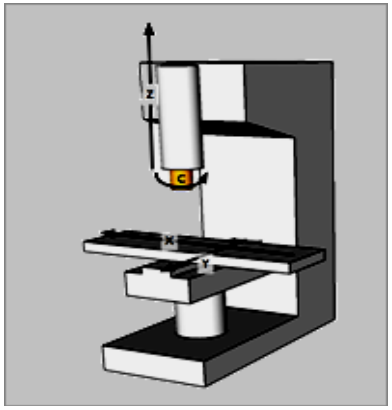

MTConnect Device

OPC FOUNDATION

Questions

DSInteroperability

OPC FOUNDATION